USER MANUAL

Thank you for choosing Better Bathrooms.
Please read this manual before installing your product
and keep for future reference.

better bathrooms

Wall Hung Toilet

- **Single-person assembly**
- **Tools required**
- **We always recommend using professional tradespeople to install your product**

V1_11.10.25

Congratulations on your purchase

And welcome to our growing gang of savvy shoppers

We're on a mission to bring you extraordinary bathroom products, for less. From modern to traditional style ceramics, plus the gorgeous fixtures, fittings and furniture to match. So, you can fall in love with your space every single day.

As one of the UK's largest independent bathroom stores, we've received countless awards; including the National Business Awards UK, the Digital Entrepreneur Awards and being placed on The Sunday Times Fast Track 100.

We hope your new product goes above and beyond your expectations. However, should any problems occur, please:

- log in to your account and contact our customer services team via your self-serve portal – betterbathrooms.com/CustomerAccount/Login
- contact us via betterbathrooms.com/content/contact-us

Important information

- Please read these instructions thoroughly and retain for future reference
- Always check for pipes and cables before drilling
- **NOTE:** There will be residual water flow after flushing which is the waterway emptying as this still contains water and this is a normal occurrence

Contents

- Component Listing
- Technical Drawing
- Tools Required
- Installation Instructions
- Troubleshooting
- Maintenance, Care & Cleaning

Component Listing

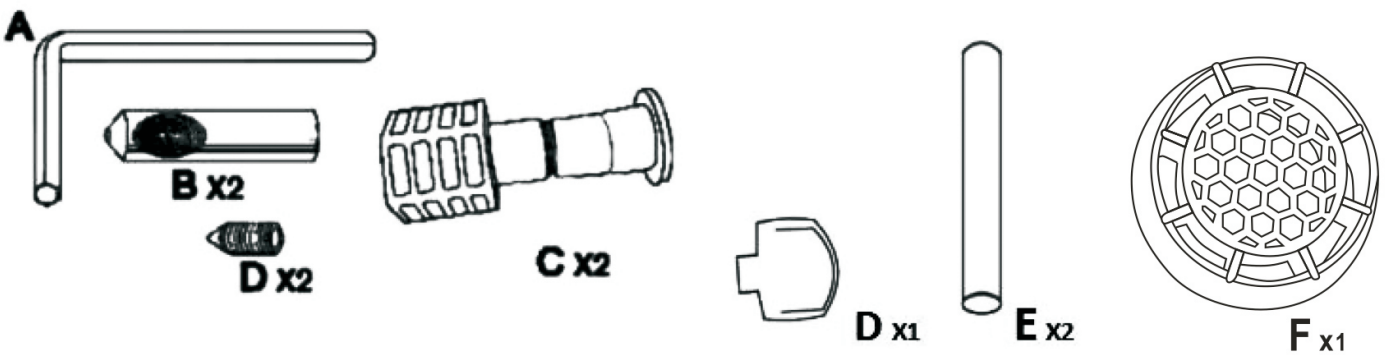

Toilet Pan Fixing kit (below components)

A. Allen key

B. 2 x Threaded connector (fixing bolts)

C. 2 x Plastic wall mounting housing

D. 1 x Tightening tool for Part C

E. 2 x Clear plastic tubes

F. 1 x Water Inlet component

Tools Required

Safety Notice:

Prior to drilling into walls, check there are no hidden electrical wires,cables or water supply pipes. Always wear protective equipment such as safety glasses and hearing protection whilst using power tools.

Tools for installation (not supplied)

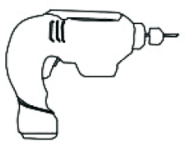 Electric drill	 PTFE Tape	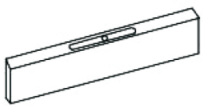 Spirit Level
 Wrench	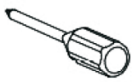 Screw driver	

Installation Instructions

Please note: Whenever possible and when safe to do so, it is recommended to carry out leak tests during the installation process.

Preparing for a Wall Hung Toilet Pan Fitting

A – Flush pipe is supplied with the Wall Frame/cistern assembly, (Wall Frame/cistern sold separately).
B – Pan connector (waste pipe) supplied with Wall Frame/cistern assembly.

A 

B 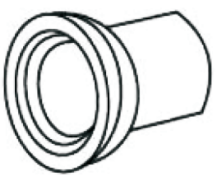

Please note: Pipes are not included.

Once you have received your toilet pan, this will allow you to prepare and install the Wall Frame/cistern (both sold separately). To install the Wall Frame/cistern, please use the instruction guides supplied with them.

This guide advises on installation of the wall hung toilet pan only.

Wall Hung Toilet Pan Fitting

After the wall frame has been set in the wall and the wall has been finished, the installation of the toilet pan to the frame can begin.

1. Prepare the pipes as advised (cutting of the flush pipe and pan connector may be required).
2. The threaded bars should be exposed from the frame through the wall, as shown below.

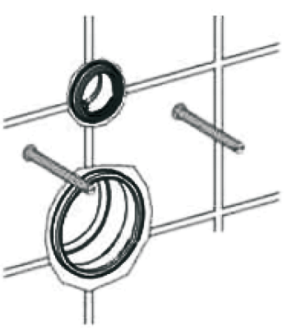

3. It is advisable to apply a small amount of lubricant (washing up liquid) to the flush pipe and pan connector to assist with fitting the toilet pan.

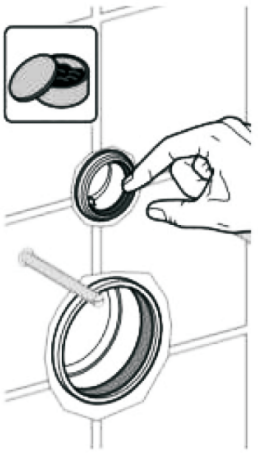

4. Connect the flush pipe and pan connector to the frame ready for connection to the toilet pan as shown, then screw the female threaded connectors (fixing bolts) onto the threaded bars so that the cut out aligns with the fixing hole in the toilet pan.

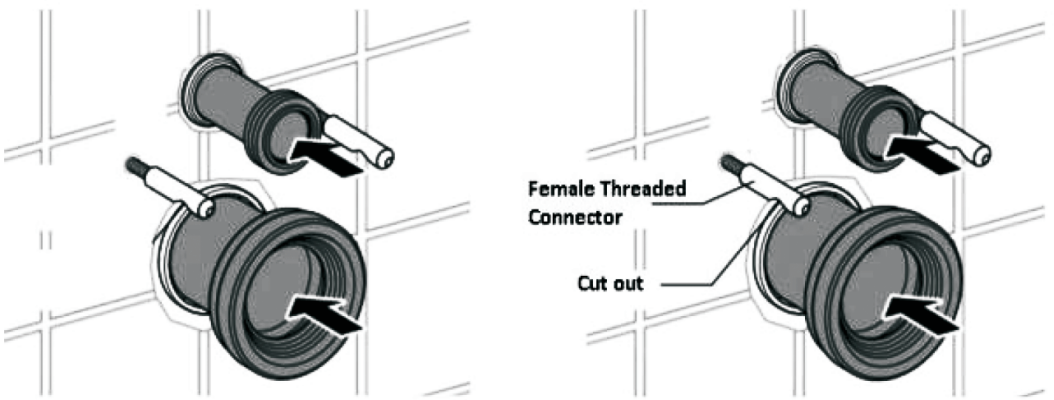

5. Insert the plastic wall mounting housing into the holes in the rear of the toilet pan and align the hole with the fixing hole on the top face of the toilet pan.

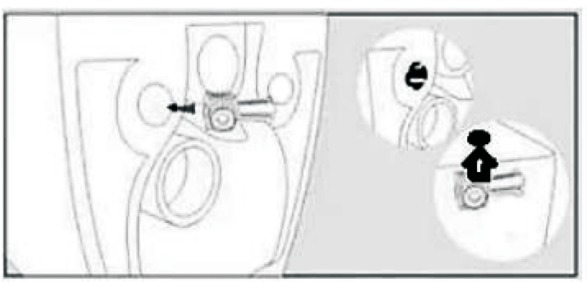

Please note: this next section will require two people.

6. Push the toilet pan onto the wall frame ensuring that the flush pipe and pan connector fully engage with the toilet. (Image below shows the plastic housings fitted inside the toilet pan).

7. If the plastic housing Part C does not align with the hole in the pan, due to length, you will need to fit the plastic spacers Part H

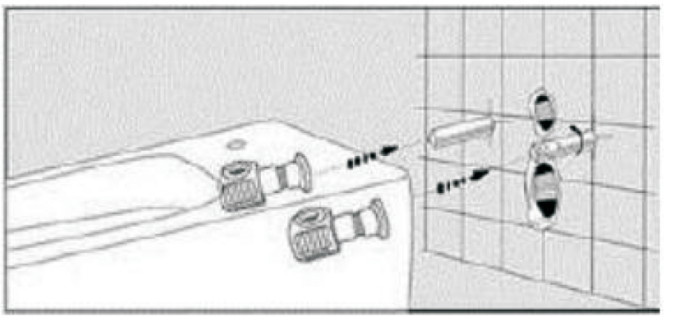

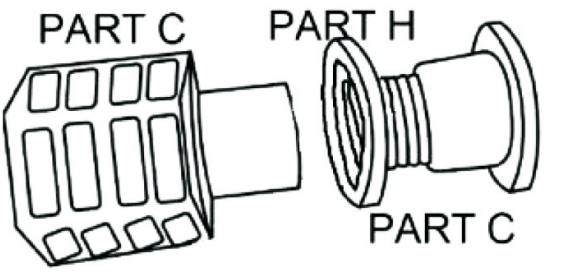

Please note: The cut out on the connector and the hole in the housing should be aligned.

Please note: On this version, the fixing hole is located on the top face, not in the side of the toilet pan.

8. Using the Allen key secure the grub screw into the plastic housing and into the cut out on the connector to secure the toilet pan onto the frame.

9. The clear plastic tube Part G, can be used to assist in the installation of the screw, insert the grub screw into the end of the tube and then insert the tube into the hole in the toilet and insert the screw into the plastic housing and tighten



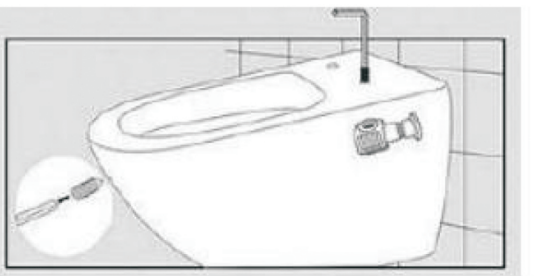

10. Once the installation is completed, a flush and leak test should be carried out before final seal if the concealed cistern water volume is too much for a tornado toilet, customers can install the water inlet component(F) at the end of the water incoming hole and do the flush test againto meet your ideal flushing. then the toilet can be sealed around the edge to finish.

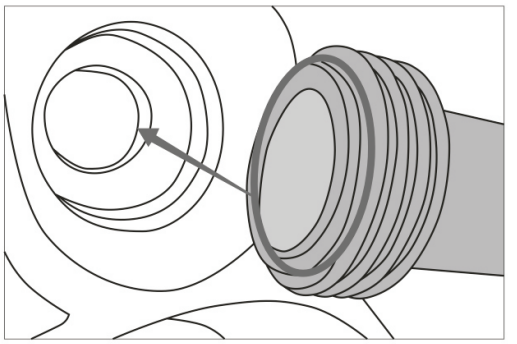

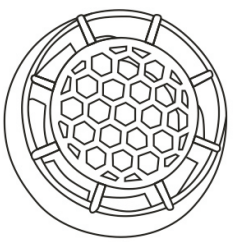

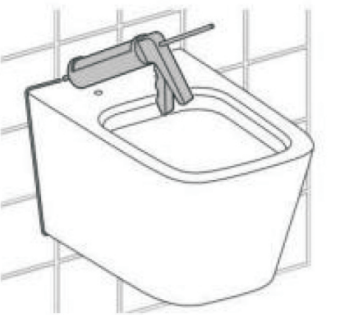

Troubleshooting

Flush volume into the pan, not sufficient

1. Adjust the flush volume level on the syphon.
2. Check that the syphon is opening correctly.
3. If none of these resolve the issue replace the syphon.

Water running into the pan continually after flushing

1. Establish if the water level in the cistern is reaching the overflow on the syphon, if it does reach the overflow adjust the inlet valve.
2. If this continues, replace the inlet valve.
3. If the water level does not reach the overflow on the syphon, remove the top section of the syphon and check the washer for damage.
4. If the washer is damaged then replace.

Maintenance, Care & Cleaning

Maintenance

All of the maintenance measures resulting from troubleshooting above requires you to access the internals of the cistern tank and for the water supply to be turned off. Please refer to the instruction guide supplied with your cistern for further guidance.

Cleaning

To maintain the surface finish of your product, wipe clean after every use, using a clean damp cloth, a mild detergent mixture can be used. Do not use abrasive cleaning agents or materials which can strip and scratch the surface; the use of these agents or materials can invalidate your guarantee.